» SUCTION-IRRIGATION HANDLES AND TUBES «

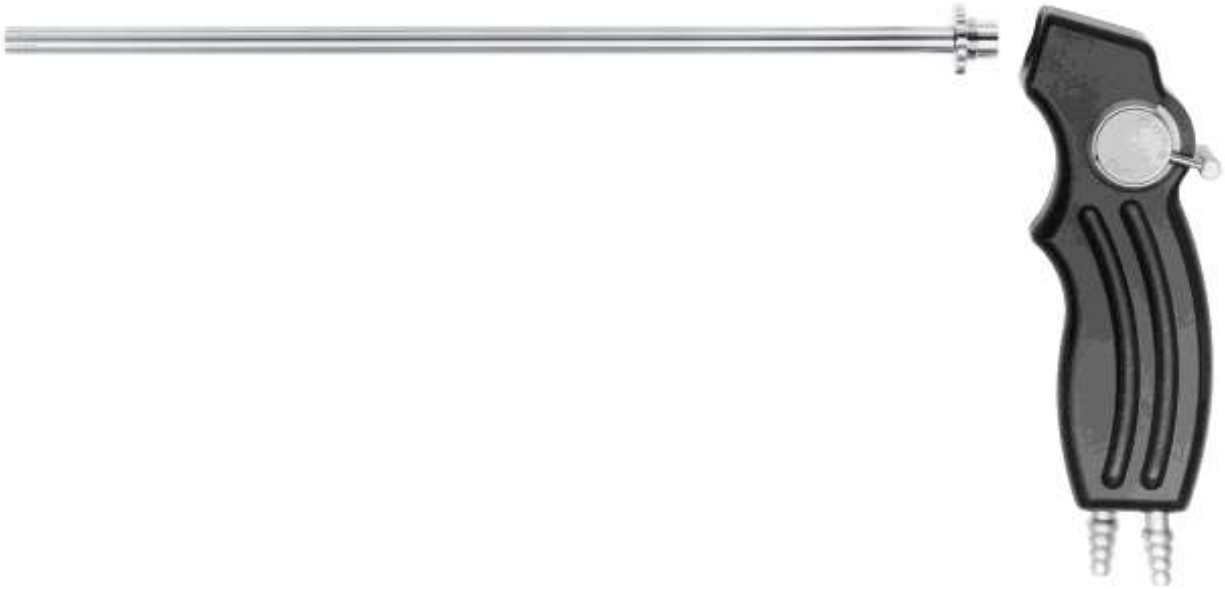

Tekno-Medical Optik-Chirurgie GmbH
Sattlerstraße 11 D-78532 Tuttlingen
Tel.: +49 (0) 7461 1701-0 Fax: +49 (0) 7461 1701-50
E-Mail: mail@tekno-medical.com www.tekno-medical.com

CE 0483

Tekno-Medical Optik Chirurgie GmbH
Sattlerstr. 11
78532 Tuttlingen
GERMANY

Telefon: +49 (0) 7461 / 17 01 0
Fax: +49 (0) 7461 / 17 01 50

Mail: mail@tekno-medical.com
Web: www.tekno-medical.com

Tekno-Medical Optik-Chirurgie GmbH
Sattlerstraße 11 D-78532 Tuttlingen
Tel.: +49 (0) 7461 1701-0 Fax: +49 (0) 7461 1701-50
E-Mail: mail@tekno-medical.com www.tekno-medical.com

CE 0483

Content

1 Scope 4
2 Inspections 4
3 Handling 4
4 Intended use 4
5 Indications 4
6 Contraindications 4
7 Patient population 4
8 Disposal 5
9 Usage and safety notes 5
10 Product description 5
11 Assembly and disassembly 6
11.1 Assembly 6
11.2 Disassembly 6
11.3 Functional test 6
12 Application 6
13 Reprocessing 6
13.1 On-site preparation 7
13.2 Transport 7
13.3 Preparation for decontamination 7
13.4 Manual pre-cleaning 7
13.5 Automated cleaning 7
13.6 Automated (thermal) disinfection 8
13.7 Functional testing 8
13.8 Packaging 8
13.9 Sterilization 8
13.10 Storage 8
13.11 Information on the validation of the reprocessing 8
14 Additional Instructions 9
15 Reporting product issues 9
16 Warranty 9
17 Service and repair 9
18 Symbols 10
19 Product listing 10

Tekno-Medical Optik-Chirurgie GmbH
Sattlerstraße 11 D-78532 Tuttlingen
Tel.: +49 (0) 7461 1701-0 Fax: +49 (0) 7461 1701-50
E-Mail: mail@tekno-medical.com www.tekno-medical.com

CE 0483

In order to keep risks to patients, users or third parties as low as possible, the instructions for use must be carefully followed. The use, reprocessing and testing of the instruments may only be carried out by trained personnel.
Before using the instrument, the entire instructions for use must be read. This also applies to the instructions for use of the devices used in combination. The specifications, safety instructions and warnings in the respective instructions for use must be strictly adhered to.
The reusable suction-irrigation handles with tubes from Tekno-Medical Optik-Chirurgie GmbH (Tekno) are delivered non-sterile and must go through the complete reprocessing cycle (cleaning, disinfection and sterilization) before the first and every subsequent use.

1 SCOPE

MD

These instructions for use are valid for the suction-irrigation handles with suction-tubes from Tekno-Medical Optik-Chirurgie GmbH. (See item list in the last paragraph of these instructions for use.)

2 INSPECTIONS

Before each use of the instruments, they must be inspected for breaks, cracks, deformations, damage and functionality. Areas such as connections and working tips must be checked particularly carefully. Worn, corroded, deformed, porous or otherwise damaged instruments must be discarded. In addition to the efforts made by the manufacturer in selecting the right materials and carefully processing them, the user must provide the instruments with professional and continuous care and professional reprocessing!

3 HANDLING

The products may only be used for their intended purpose by appropriately trained and qualified personnel. The attending physician or user is responsible for the selection of instruments for specific applications or surgical use, the appropriate training of personnel and experience in handling the products.
This product may only be used in medical facilities by trained medical professionals.

4 INTENDED USE

Suction irrigation handles are used to irrigate the surgical field or to suction blood and other fluids as well as small tissue fragments from the surgical field.

5 INDICATIONS

Suction irrigation handles are used during minimally invasive surgical procedures. They are intended for connection to suction irrigation devices via a flexible connection, but are operated manually.
The products are not intended for use in direct contact with the central nervous system or for correcting defects in the heart or central circulatory system!

6 CONTRAINDICATIONS

The use of suction instruments is generally contraindicated, if the use of other surgical techniques is indicated. In addition, there are contraindications,

- in case of general inoperability;
- in the absence of readiness on the part of the patient;
- if the technical requirements are not met.

The physician in charge must decide on the basis of the patient's general condition whether the intended intervention can be carried out. The instrument should not be used if, in the opinion of the responsible physician, the risks to the patient exceed the benefits.

7 PATIENT POPULATION

Apart from the contraindication, there are no restrictions on the patient population.

Tekno-Medical Optik-Chirurgie GmbH
Sattlerstraße 11 D-78532 Tuttlingen
Tel.: +49 (0) 7461 1701-0 Fax: +49 (0) 7461 1701-50
E-Mail: mail@tekno-medical.com www.tekno-medical.com
CE 0483

8 DISPOSAL

If the instruments can no longer be repaired and reprocessed, the instruments must be disposed, in accordance with the applicable country-specific regulations.

9 USAGE AND SAFETY NOTES

Failure to observe these instructions for use and safety instructions can lead to injuries, malfunctions or other unexpected incidents.
All types of reusable instruments must be completely cleaned, disinfected and sterilised before first use and before each subsequent use.
Before each use, the instrument must be inspected for correct function and visible damage and wear, such as cracks or breaks. The patency of the instruments must be ensured before each use.
The packaging is unsuitable for the high temperatures during autoclaving and must be discarded before the first sterilisation.
Do not overload the instruments. Overloading due to excessive force can lead to breakage, bending and malfunctions of the medical device and injury to the patient or user. Do not bend bent instruments back into their original position, risk of breakage.
Do not use a damaged or defective product. Sort out and label damaged product immediately and exclude further use.
⚠ When connecting the instruments to the suction-irrigation device, ensure that the connection hoses are secure and tight.

10 PRODUCT DESCRIPTION

The tube is connected to the suction and irrigation handle and inserted via a trocar sleeve into the surgical site.
Additional holes on the tube enlarge the suction and irrigation range. You can switch between the suction and irrigation function using the lever on the handle:
Lever in „Irrigation“-position -> Irrigation.
Lever in „Suction“-position -> Suction.

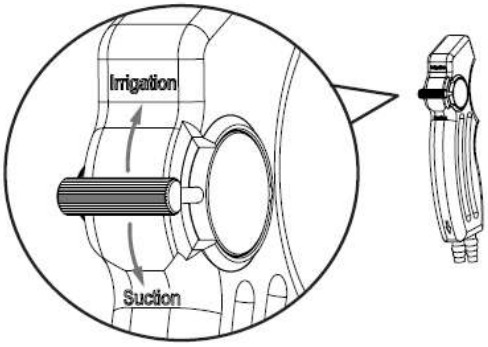

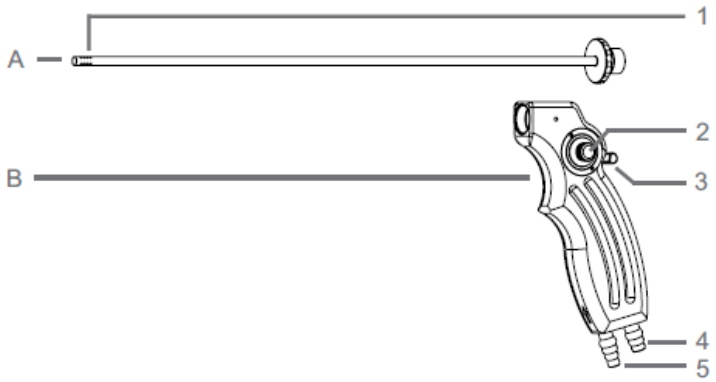

A	Suction-irrigation tube
B	Suction-irrigation handle
1	Suction-irrigation holes
2	Spring cap
3	Lever
4	Suction tube connection
5	Irrigation tube connection

Tekno-Medical Optik-Chirurgie GmbH
Sattlerstraße 11 D-78532 Tuttlingen
Tel.: +49 (0) 7461 1701-0 Fax: +49 (0) 7461 1701-50
E-Mail: mail@tekno-medical.com www.tekno-medical.com
CE 0483

11 ASSEMBLY AND DISASSEMBLY

11.1 Assembly

Insert the cock plug and screw on the spring cap.

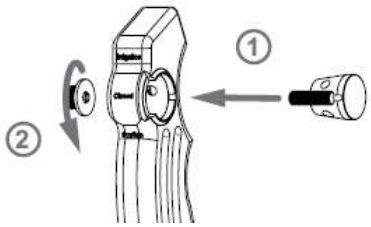

11.2 Disassembly

Unscrew the spring cap and remove the cock plug.

(The suction and irrigation tube cannot be disassembled.)

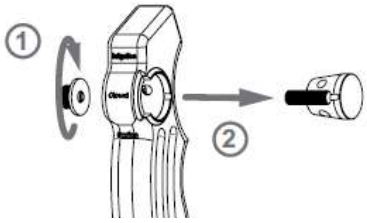

11.3 Functional test

Perform the functional test for the suction and irrigation handle immediately after assembly.
Move the lever to “Suction” and “Irrigation” position. The lever should move easily.

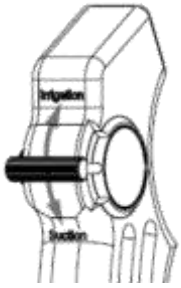

12 APPLICATION

- Screw the suction and irrigation tube on the suction and irrigation handle.
- Connect the tube connections with a suction-irrigation device.
- Insert the instrument via a trocar sleeve.
- Perform the intervention.
- Remove the instrument.
- Reprocess the instrument.

WARNING: Risk of injury from the use of incompatible instruments.
Only use original accessories.

Note: During suctioning, tissue fragments may settle in the suction and irrigation holes. For this reason, rinse the tube several times outside the surgical site during the intervention.

13 REPROCESSING

In general, surgical instruments may only be reprocessed by persons who have the necessary expertise for the intended activities.
Detailed information on the reprocessing of surgical instruments can be found in the "**Red Brochure**" of the AKI. Under www.a-k-i.org you will also find links to laws, standards and publications of processing expert committees.
Due to the product design and the materials used, no defined limit of maximum feasible applications can be set. The service life of medical devices is determined by their function and gentle handling. Frequent reprocessing has little effect on the product. The end of product life is usually determined by wear and damage caused by use. The legibility of the marking has been verified over 200 preparations.

Tekno-Medical Optik-Chirurgie GmbH
Sattlerstraße 11 D-78532 Tuttlingen
Tel.: +49 (0) 7461 1701-0 Fax: +49 (0) 7461 1701-50
E-Mail: mail@tekno-medical.com www.tekno-medical.com
CE 0483

13.1 On-site preparation

Immediately after use, remove coarse dirt from the instruments. Do not use any fixing agents or hot water (>40°C), as this will cause residues to freeze and may affect the success of cleaning.

13.2 Transport

Safe storage in a closed container and transport of the instruments to the reprocessing site to avoid damage to the instruments and contamination to the environment.

13.3 Preparation for decontamination

If possible, the instruments must be disassembled or opened for reprocessing. The instruments must be stored on machine-compatible instrument carriers in a dishwasher-safe manner. The condition of the instrument panels must not impair the subsequent cleaning and disinfection by means of sound or rinsing shadows.

13.4 Manual pre-cleaning

For manual cleaning / pre-cleaning, never use metal brushes, metal sponges or abrasive cleaning agents. Place the instruments in cold water for at least 5 minutes. If possible, disassemble the instruments and clean them under cold water with a soft brush until no residue is visible. Pressure flush cavities, holes and threads with a water gun for at least 10 seconds (pulsed method, minimum pressure 2 bar).
Place instruments in an ultrasonic bath at 40°C for 15 minutes with 0.5% alkaline or enzymatic cleaner and sonicate. Remove instruments and rinse with cold water.
The cleaning solution should be changed at least once a day, more often if necessary. Too much contamination impairs the cleaning effect and increases the risk of corrosion.
National laws and guidelines must be observed.

13.5 Automated cleaning

Place the opened instruments in a sieve tray on the slide-in carriage and start the cleaning process. Disassemble instruments as much as possible.

Step	Parameter	
Pre-rinsing 1	Rinsing-temperature + water quality	Cold tap water
	Exposure time	60 s
Pre-rinsing 2	Rinsing-temperature + water quality	Cold tap water
	Exposure time	180 s
Cleaning	Cleaning-temperature	45°C
	Water quality	Tap water
	Exposure time	300 s (worst case condition) / RKI Recommendation: 600 s
	Detergent	Neodisher Medizym
	Concentration	0,50 %
Neutralization	Rinsing-temperature	40°C
	Water quality	Tap water
	Exposure time	180 s
	Neutralizing detergent	Neodisher Z
	Concentration	0,10 %
Post-rinsing	Rinsing-temperature	40 °C
	Water quality	Deionized water
	Exposure time	120 s

Tekno-Medical Optik-Chirurgie GmbH
Sattlerstraße 11 D-78532 Tuttlingen
Tel.: +49 (0) 7461 1701-0 Fax: +49 (0) 7461 1701-50
E-Mail: mail@tekno-medical.com www.tekno-medical.com
CE 0483

13.6 Automated (thermal) disinfection

Step	Parameter	
Thermal Disinfection	Disinfection-temperature	90°C (A_0 3000)
	Water quality	Deionized water
	Exposure time	300 s
Drying	Drying of the outside of the instruments by the drying cycle of the washer-disinfector. If necessary, manual drying can also be achieved with the help of a lint-free cloth. Dry cavities and channels of the instruments with sterile compressed air. Allow products need to cool down to room temperature.	

For UK: The washer disinfection cycle should run at a minimum of 90°C for a minimum of 1 minute.

13.7 Functional testing

After each cleaning, the products must be macroscopically clean, i.e., free of visible contamination. Stained products must be sorted out immediately and given special treatment. All moving parts must be checked with particular attention. If errors or damage occur, the products must be sorted out immediately. Functional testing and maintenance of the instruments must be carried out extremely thoroughly. A suitable maintenance procedure increases the service life of the instruments.

13.8 Packaging

Select standard-compliant packaging of the instruments for sterilization according to DIN EN ISO 11607-1, DIN EN 868-2 and DIN EN 868-8.

13.9 Sterilization

Sterilization of the products using a fractionated vacuum process (according to DIN EN ISO 17665-1), taking into account the respective national requirements.

Pre-vacuum	3 times
Sterilization temperature	134 °C
Sterilization time	5 min
Drying time	20 min.

The use of other sterilization methods is beyond our responsibility.

Sterilization parameters UK:

Sterilization of the instruments by applying a fractionated pre-vacuum process (according to Health Technical Memorandum 01-01 Part C):

- Heat up to a minimum sterilization temperature of 134° - 137°C (maximum temperature 137°C).
- Minimum holding time: at least 3 min.

13.10 Storage

The sterilized instruments must be stored in suitable packaging in a dry, clean and dust-free environment and at a constant level of humidity. The distance between the floor and the shelf should be at least 30cm. The storage period is to be determined by the user himself.

Protect from sunlight!

13.11 Information on the validation of the reprocessing

The following materials and machines were used in the processing process:

Detergent:	Neodisher Medizym 0,5 % (v/h)
Neutralisator:	Neodisher Z 0.1% (v/v)
Washer-disinfector (RDG):	Miele PG 8535
Steam-autoclave:	Lautenschläger ZentraCert
For details see test reports: 23277 / 23278 / 23279 (CleanControlling Medical GmbH & Co. KG, 08-2021)	

Tekno-Medical Optik-Chirurgie GmbH
Sattlerstraße 11 D-78532 Tuttlingen
Tel.: +49 (0) 7461 1701-0 Fax: +49 (0) 7461 1701-50
E-Mail: mail@tekno-medical.com www.tekno-medical.com

CE 0483

14 ADDITIONAL INSTRUCTIONS

If the chemicals and machines described above are not available, it is up to the user to validate his process accordingly. It is the responsibility of the user to ensure that reprocessing, including resources, materials and personnel, is suitable to achieve the required results. The state of the art and national laws require the following of validated processes.
During reprocessing, the temperature acting on the instrument should **not** exceed **140°C**.
In principle, mechanical cleaning and disinfection are always preferable to manual cleaning. With mechanical cleaning and disinfection, there is greater safety in the process. Never use metal brushes, metal sponges or abrasive cleaning agents for manual cleaning / pre-cleaning.
The instruments must not be sterilized in hot air sterilizers.
Do not use caustic cleaning agents. Do not use strong oxidizing cleaning agents. Agents with a neutral pH value (7.0) are best suited.

15 REPORTING PRODUCT ISSUES

In accordance with the requirements of Regulation (EU) 2017/745 on medical devices and our quality management system, all product problems must be reported to the manufacturer.
During business hours, you can reach us by phone at +49 (0) 7461 / 1701-0.
Outside of regular business hours, please send an email to safety@tekno-medical.com.
Serious incidents must also be reported to the competent authority in their locality.

16 WARRANTY

The products are made of high-quality materials and undergo quality control before delivery. If errors still occur, please contact our service. Tekno-Medical cannot guarantee that the products are suitable for the respective procedure. This must be determined by the user himself. Tekno-Medical assumes no liability for incidental or resulting damages.
Tekno-Medical accepts no liability if it is proven that these instructions for use have been violated.

Attention: In the case of the use of the instruments in patients with Creutzfeldt-Jakob disease, Tekno-Medical declines any responsibility for reuse.

17 SERVICE AND REPAIR

Do not carry out any repairs or modifications to the product on your own. Only authorized personnel of the manufacturer are responsible and provided for this. Defective products must have gone through the entire remanufacturing process before being returned for repair.
For returns, use our RMA application form and the decontamination certificate.
You can find the forms on our homepage:
https://www.tekno-medical.com/de/service/reparaturservice/

Tekno-Medical Optik-Chirurgie GmbH
Sattlerstraße 11 D-78532 Tuttlingen
Tel.: +49 (0) 7461 1701-0 Fax: +49 (0) 7461 1701-50
E-Mail: mail@tekno-medical.com www.tekno-medical.com
CE 0483

18 SYMBOLS

The symbols used in this instruction and on the label have the following meaning according to DIN EN ISO 15223-1:

	Attention!		Manufacturer
MD	Medical device		Date of manufacturing
NON STERILE	Non-sterile		Read the instructions for use
REF	Catalogue number		Protect from sunlight
LOT	Lot-number		Store in a dry place
UDI	Unique device identification		
CE 0483	CE mark with the number of the notified body: **mdc – medical device certification GmbH** Kriegerstrasse 6, 70191 Stuttgart		

REF

19 PRODUCT LISTING

Printed on 16.01.2026

704-605	704-609	704-652	704-661	704-721	704-745	704-753	770-111
704-607	704-642	704-654	704-662	704-722	704-750	704-753-45	770-111-25
704-607-45*	704-644	704-656	704-665	704-730	704-751	704-753-45	
704-608	704-646	704-658	704-715	704-731	704-752	707-660-45*	
704-608-45*	704-650	704-660	704-720	704-732	704-752-45	770-100*	

TEKNO GERMANY
Tekno-Medical Optik-Chirurgie GmbH
Sattlerstraße 11 D-78532 Tuttlingen
Tel.: +49 (0) 7461 1701-0 Fax: +49 (0) 7461 1701-50
E-Mail: mail@tekno-medical.com www.tekno-medical.com

CE 0483